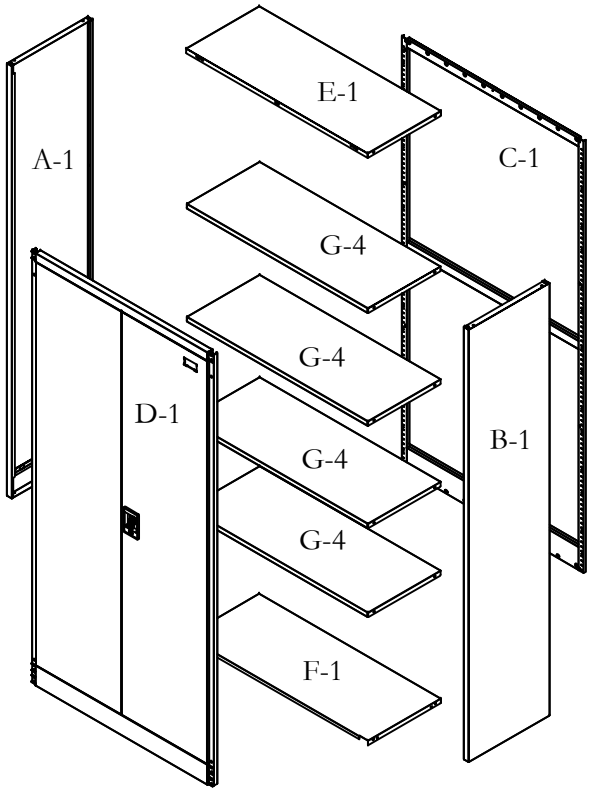
A-1
E-1
C-1
G-4
G-4
D-1
B-1
G-4
G-4
F-1

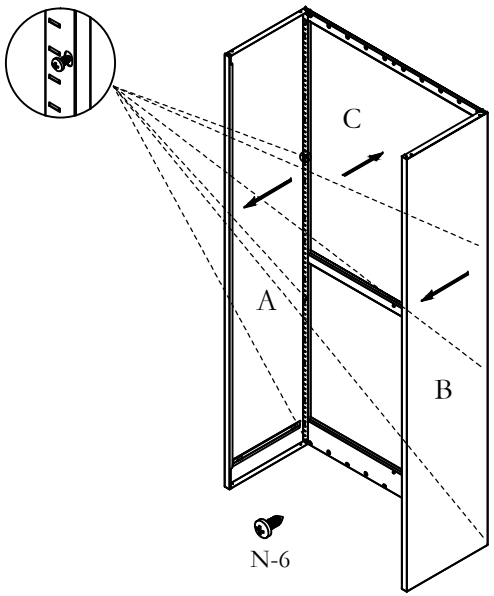
1
C
A
B
N-6

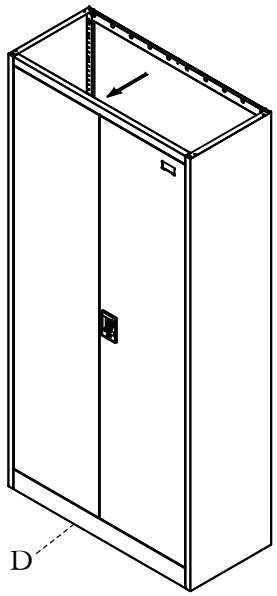
2
D

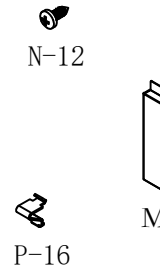
N-12
M-1
P-16

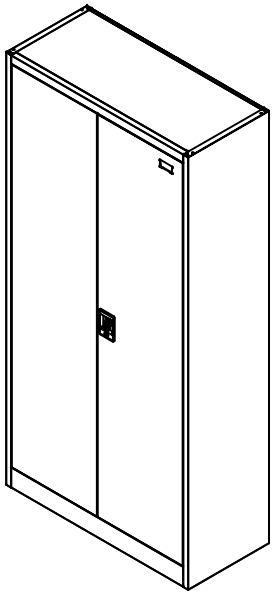

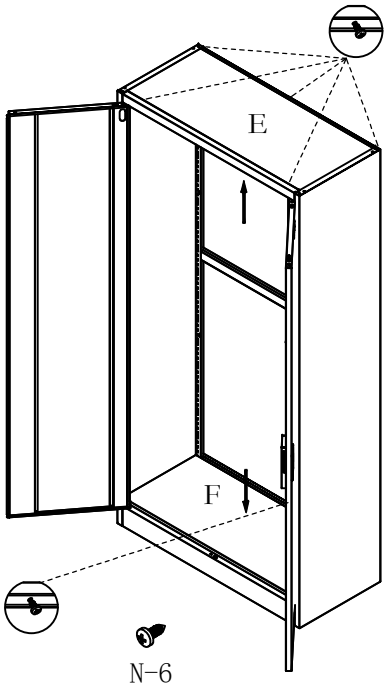
3
E
F
N-6

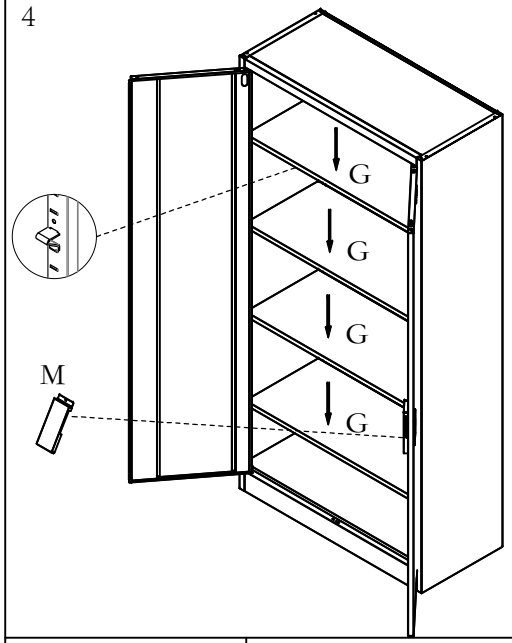
4
G
G
G
G
M

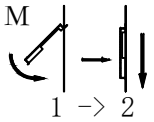
M
1 -> 2

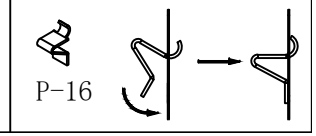
P-16

B2Bpartner