B2Bpartner

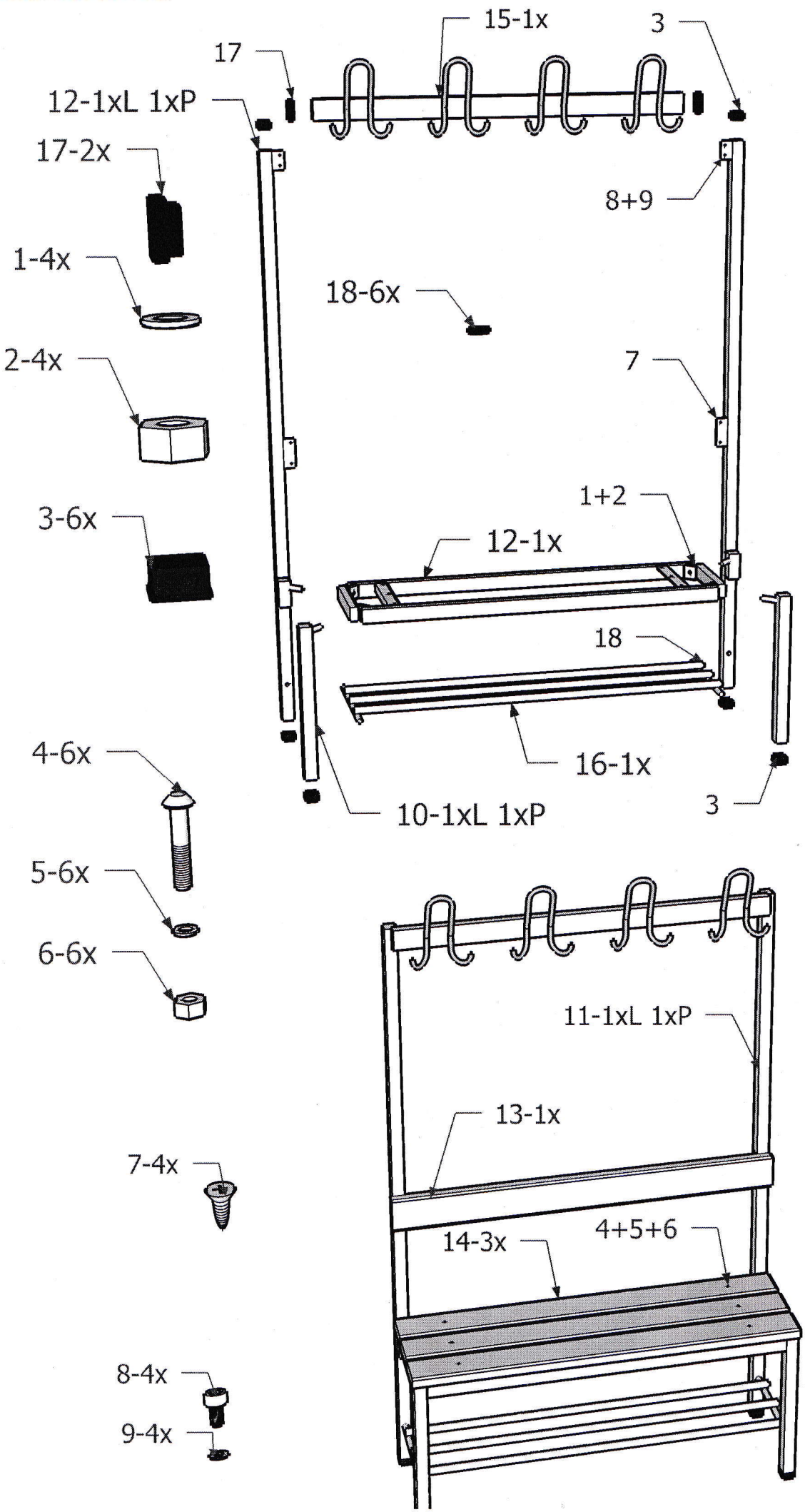
15-1x
3
17
12-1xL 1xP
17-2x
8+9
1-4x
18-6x
2-4x
7
1+2
3-6x
12-1x
18
4-6x
16-1x
10-1xL 1xP
3
5-6x
6-6x
11-1xL 1xP
13-1x
7-4x
14-3x
4+5+6
8-4x
9-4x