B2Bpartner

6100234

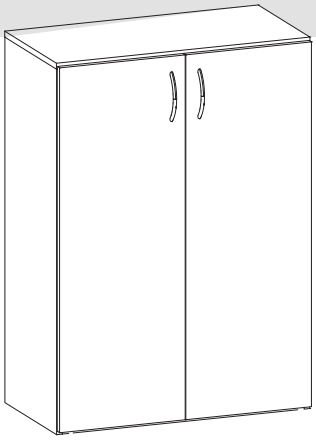

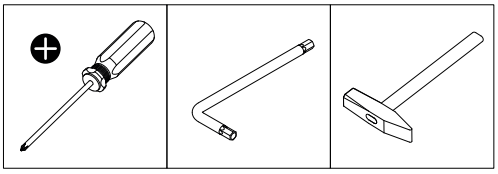

Ø8 × 35							
A 24×	B 16×	C 16×	D 1×	E 4×	F 4×	G 16×	H 4×

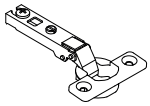	Ø3,5 × 16	Ø4 × 25	
J 4×	K 8×	L 4×	M 2×

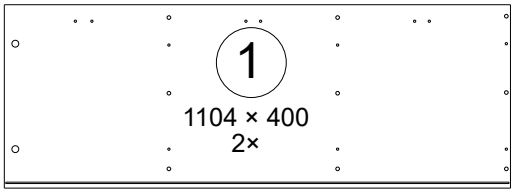

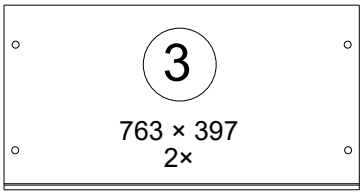

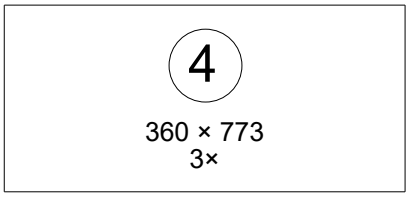

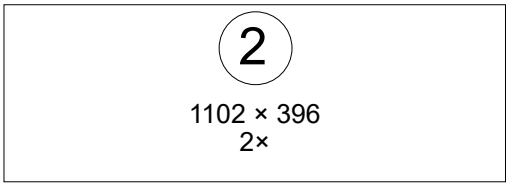

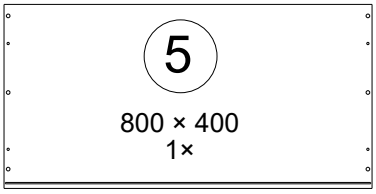

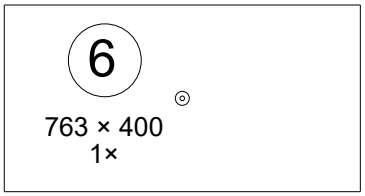

1

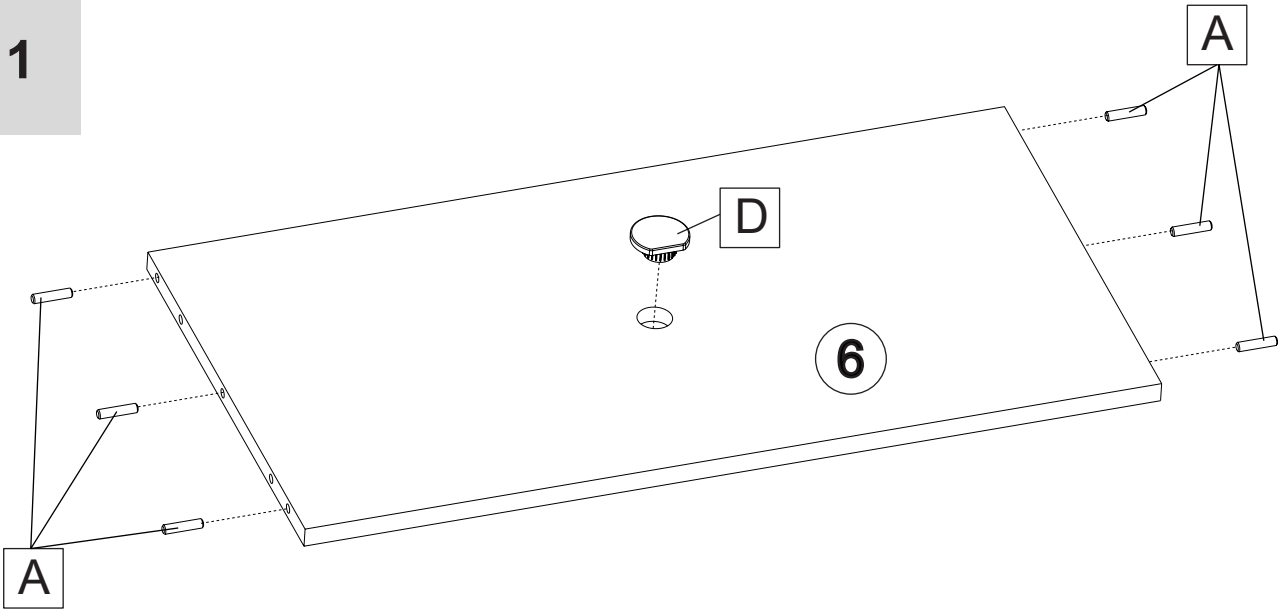

2

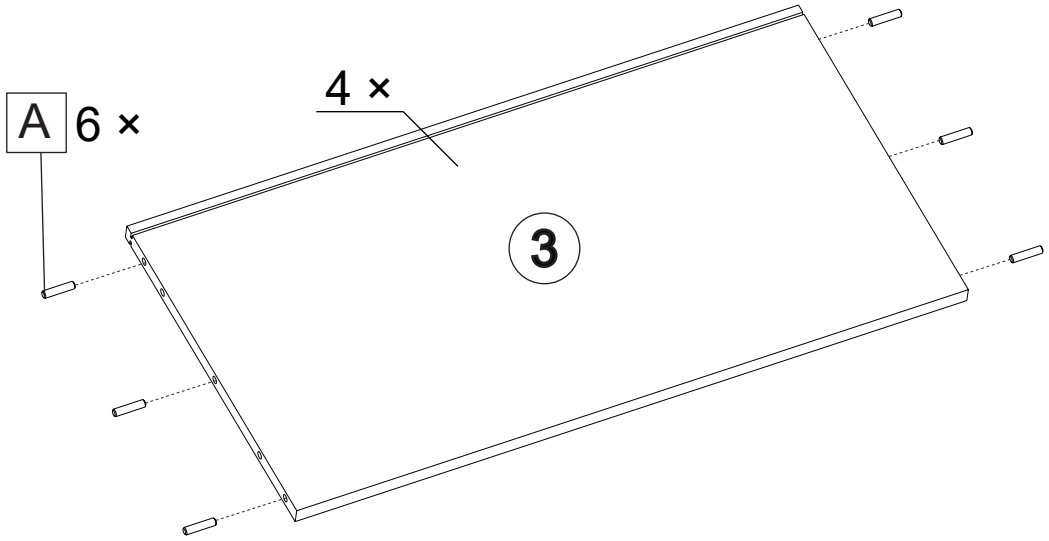

3

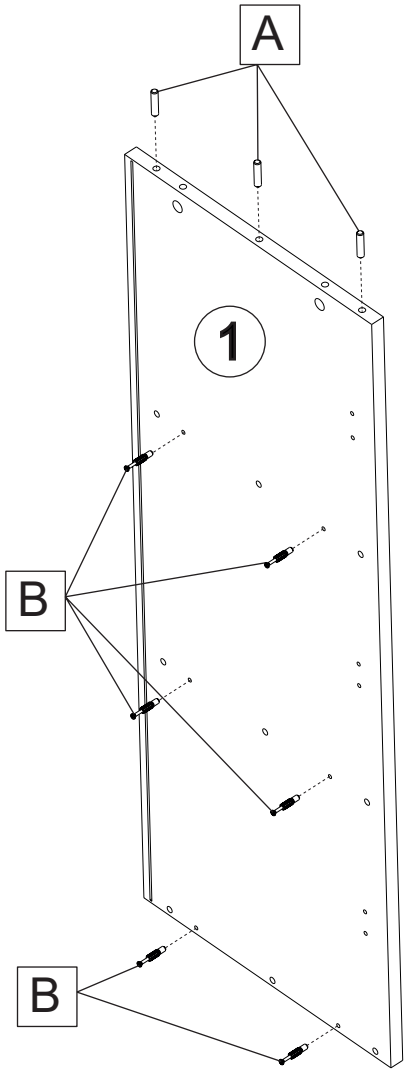

4

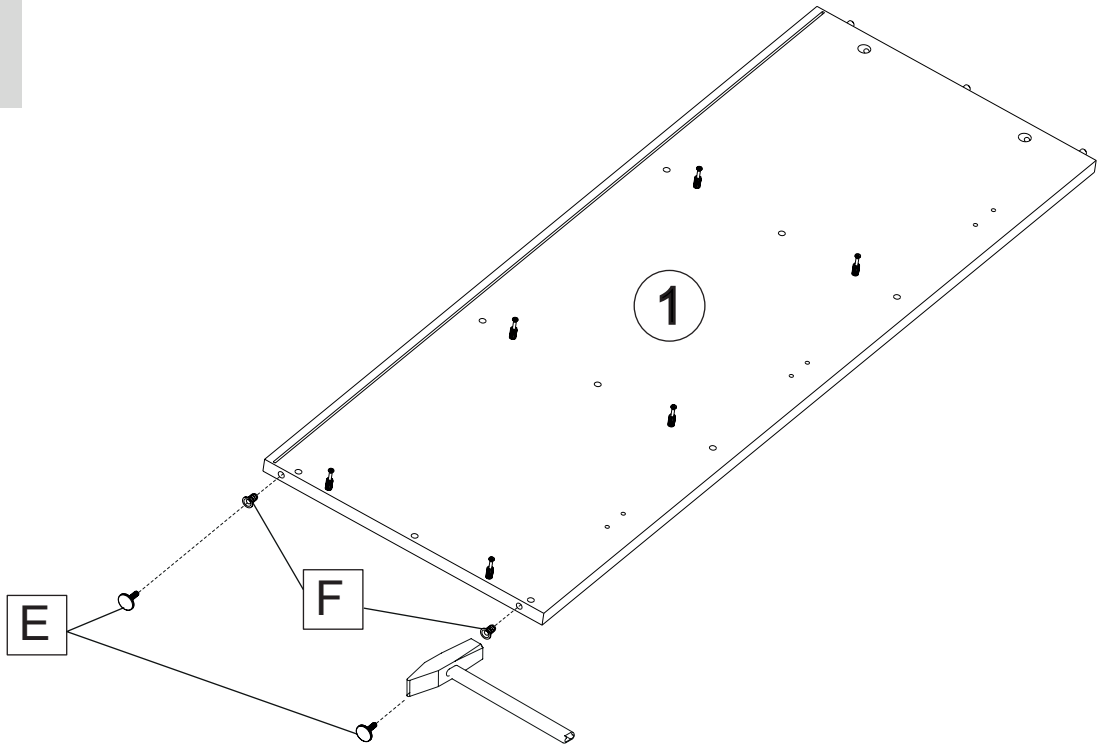

5

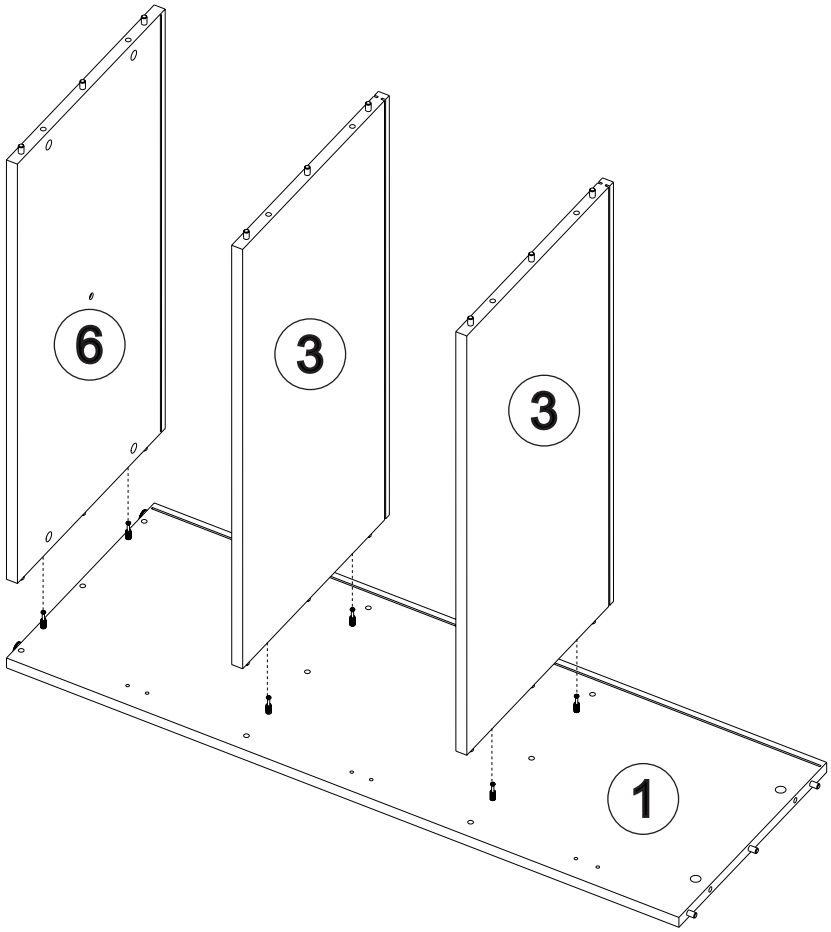

6

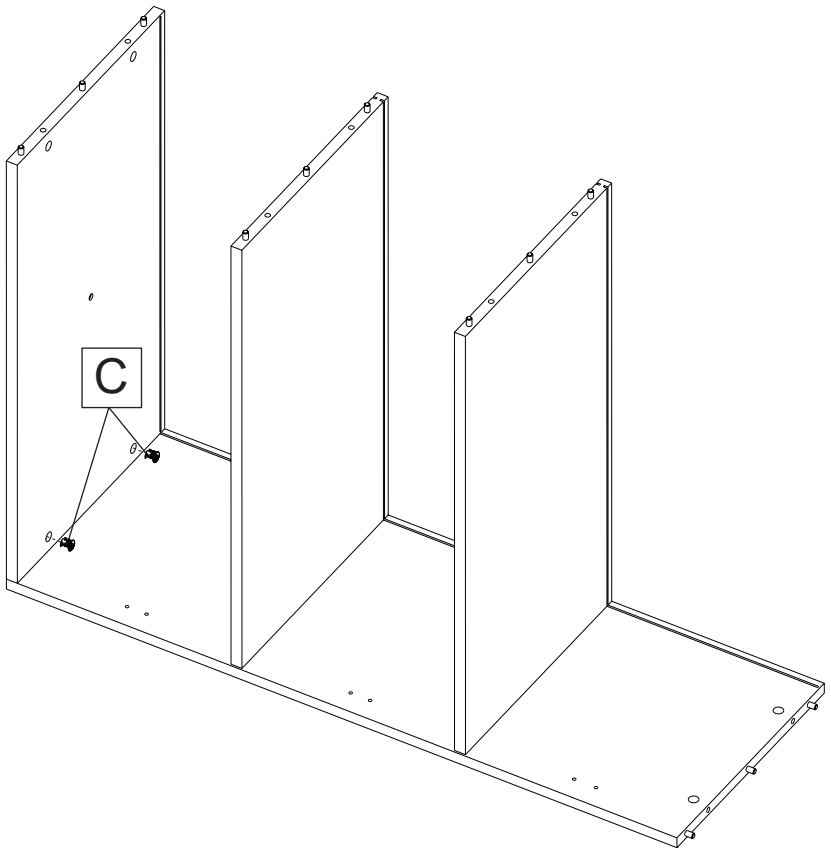

7

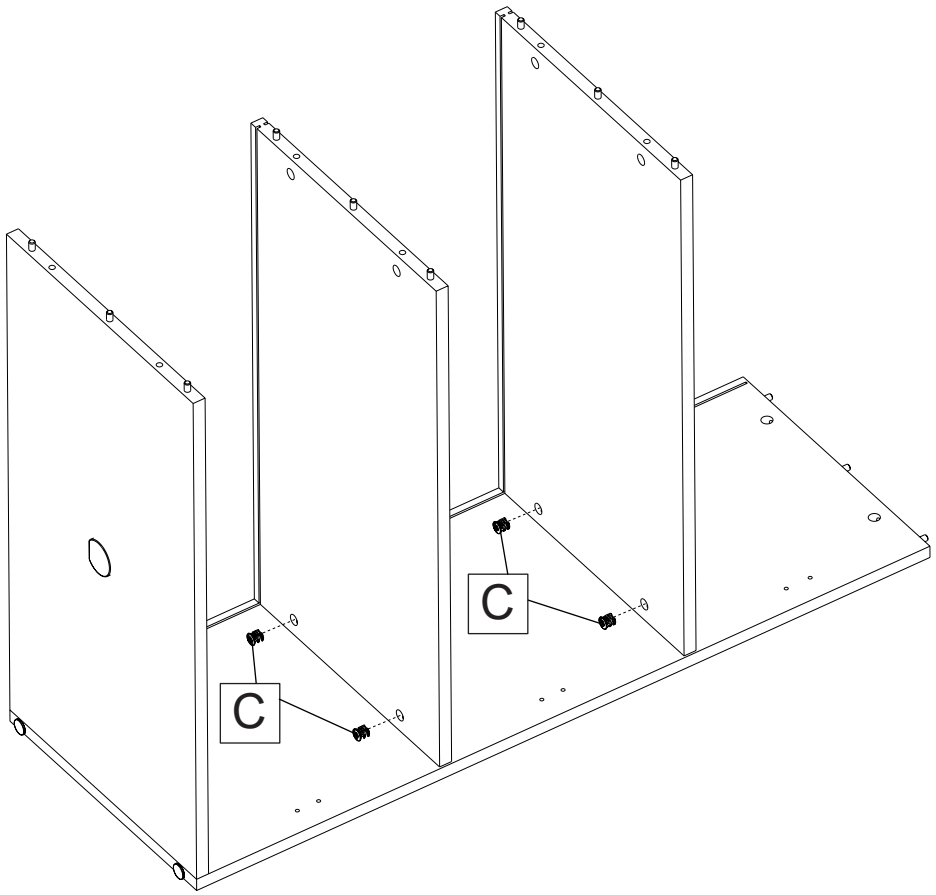

8

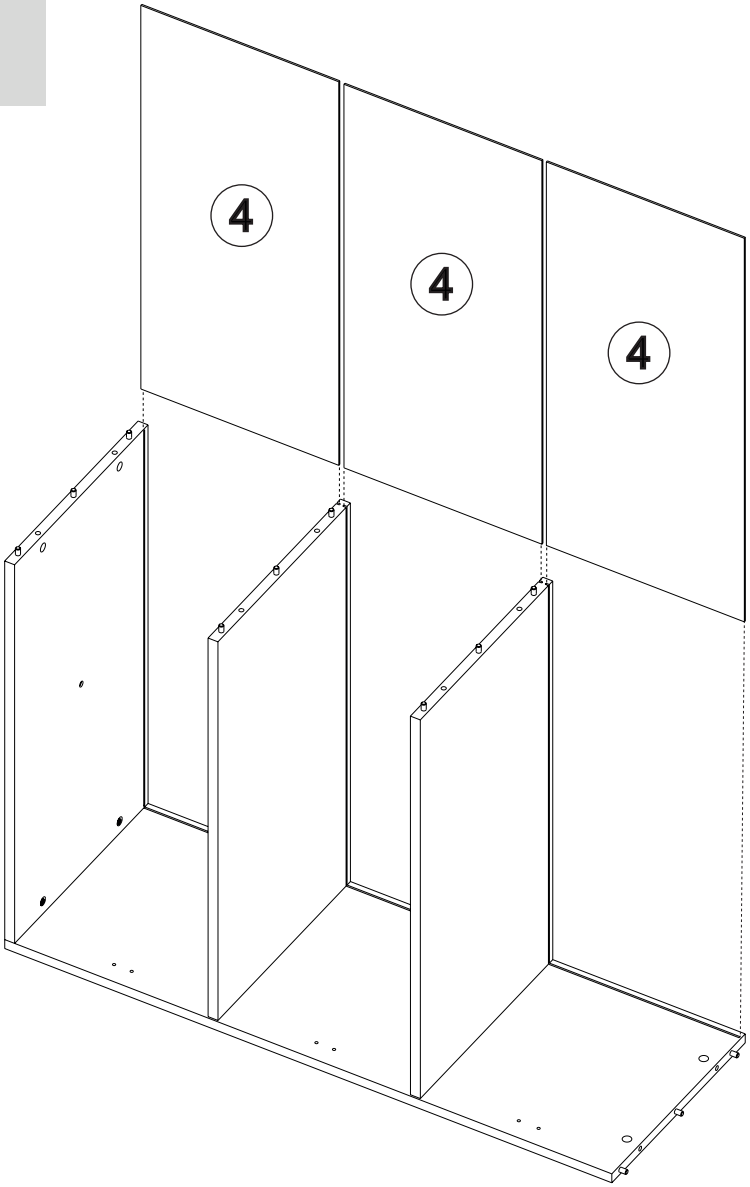

9

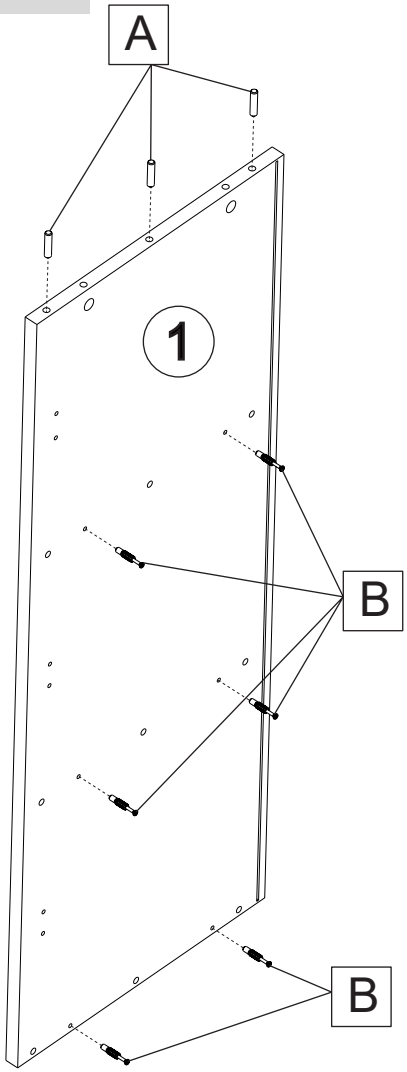

10

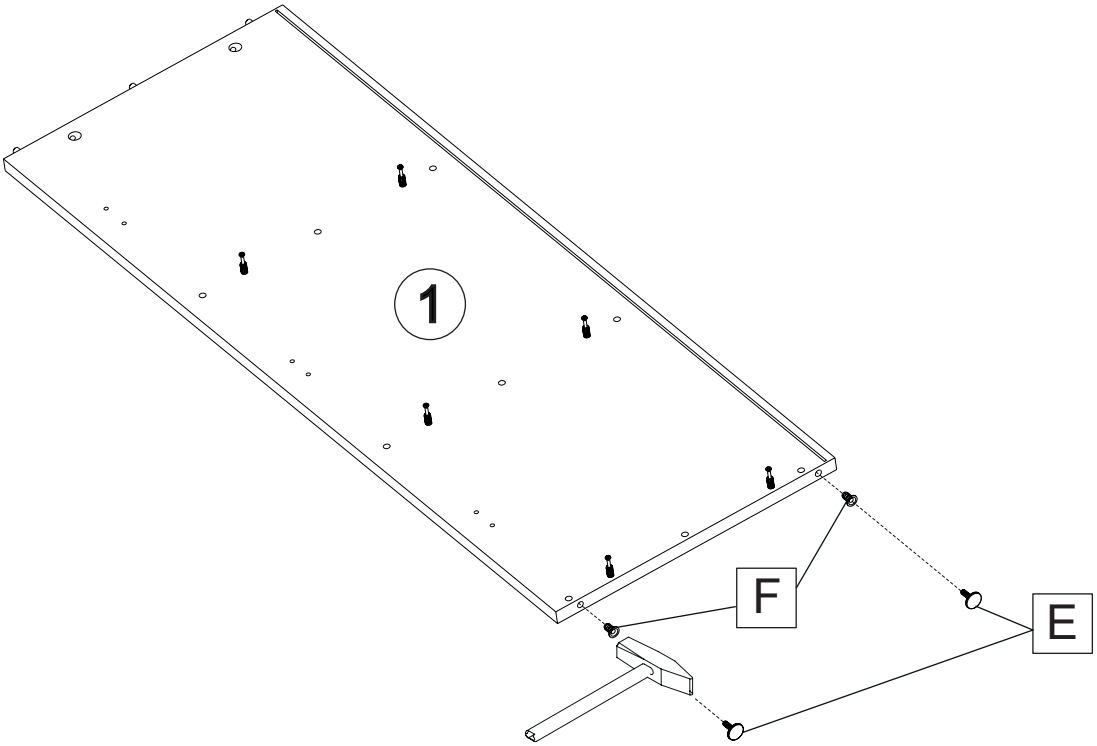

11

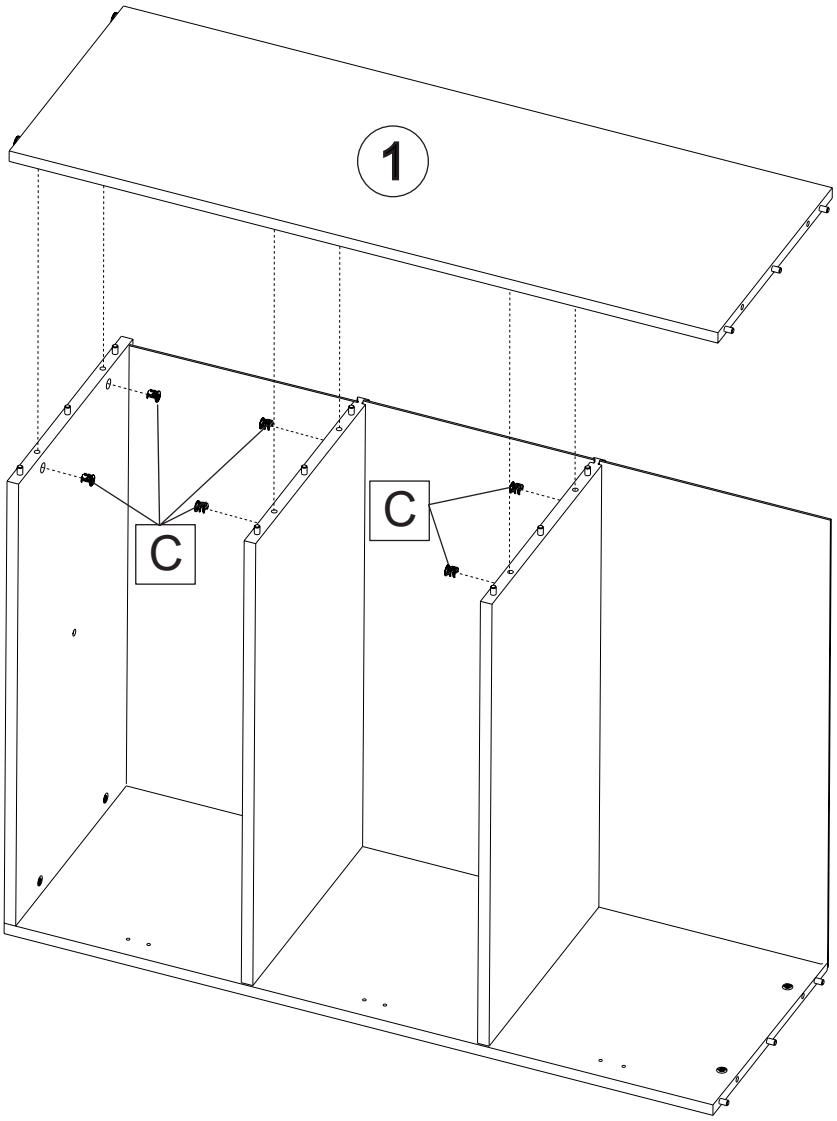

12

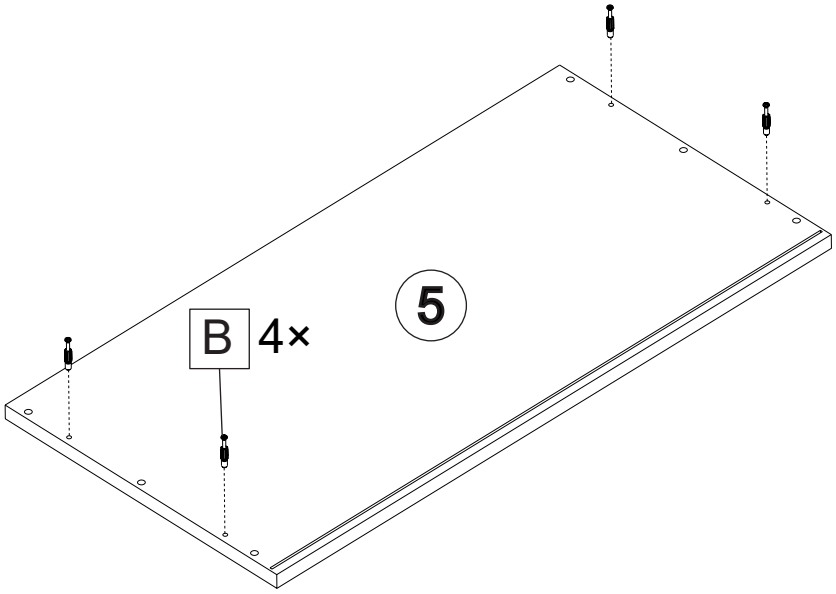

13

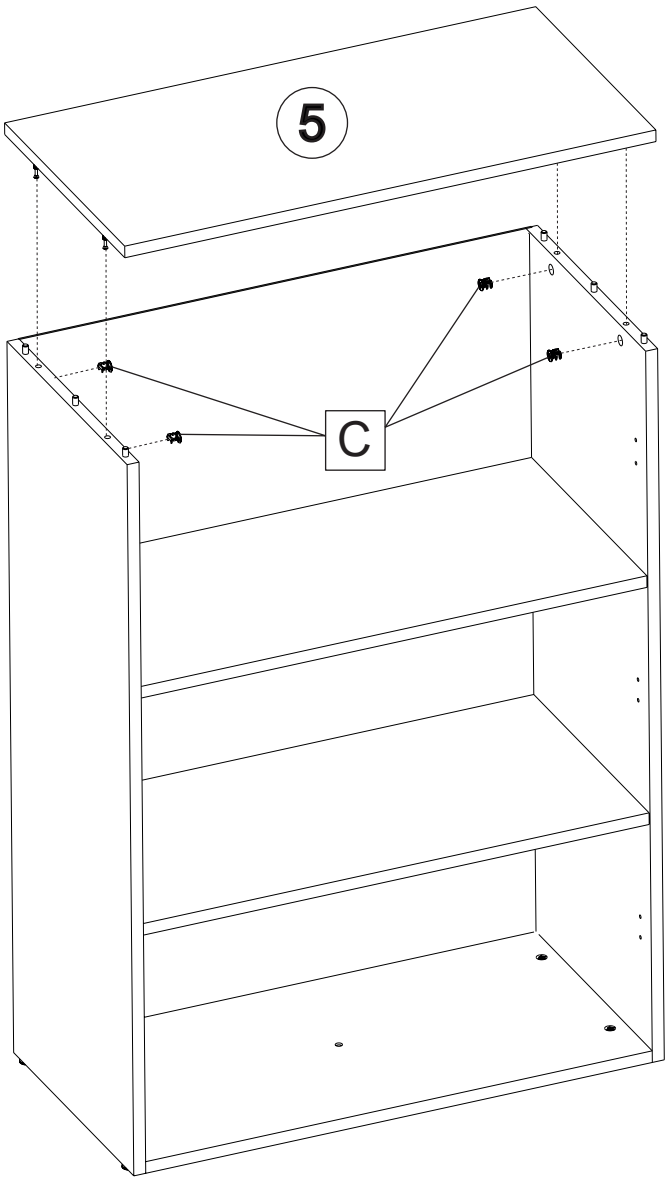

14

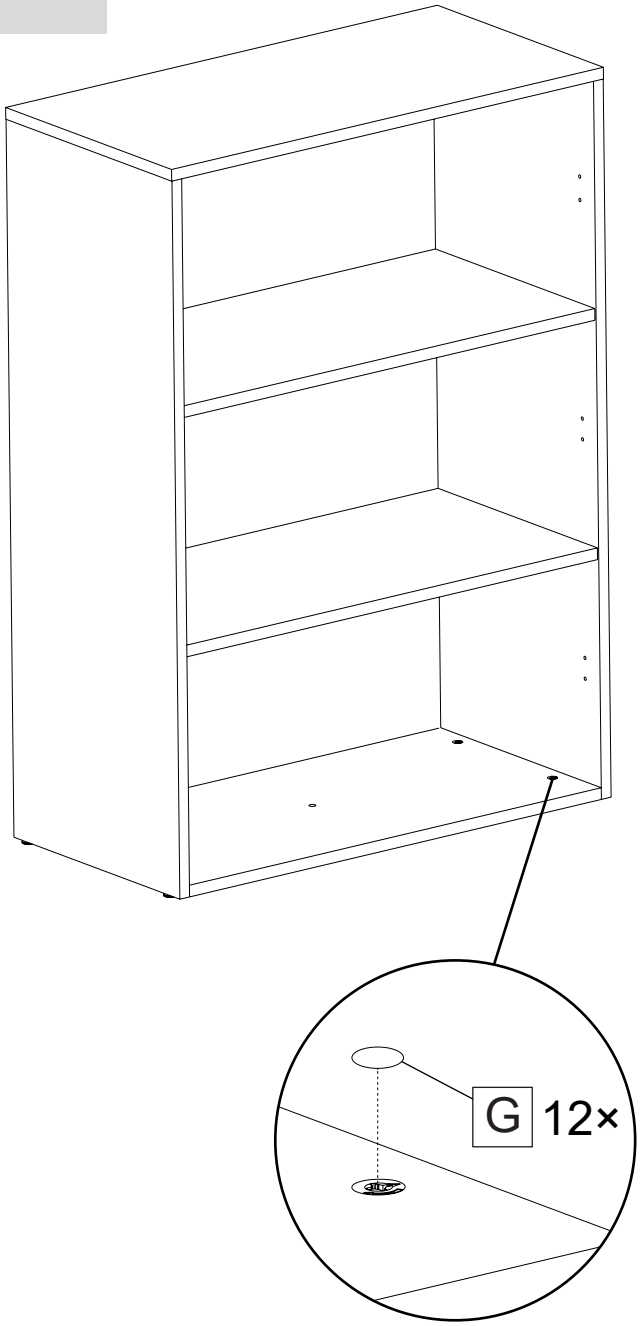

15

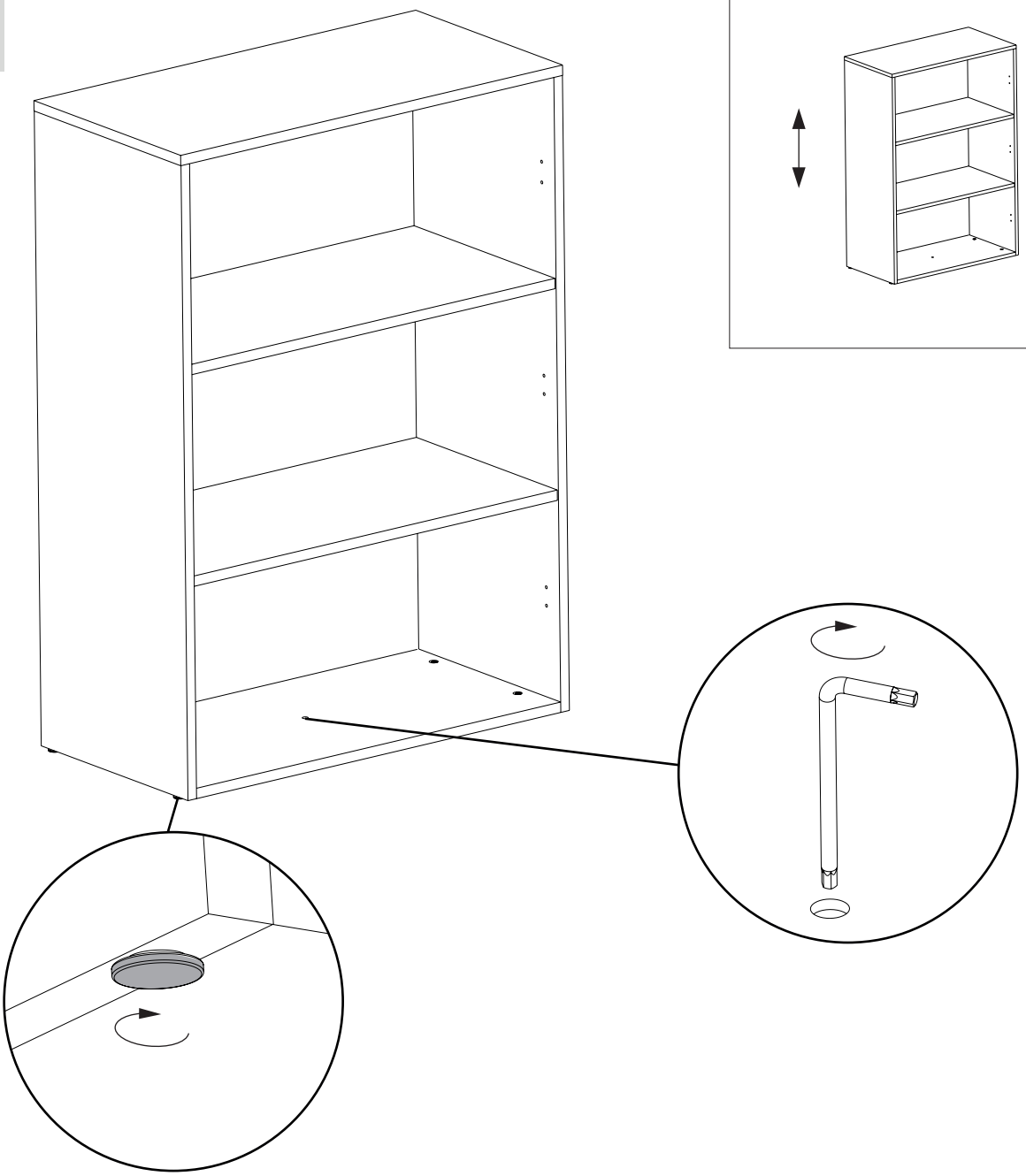

16

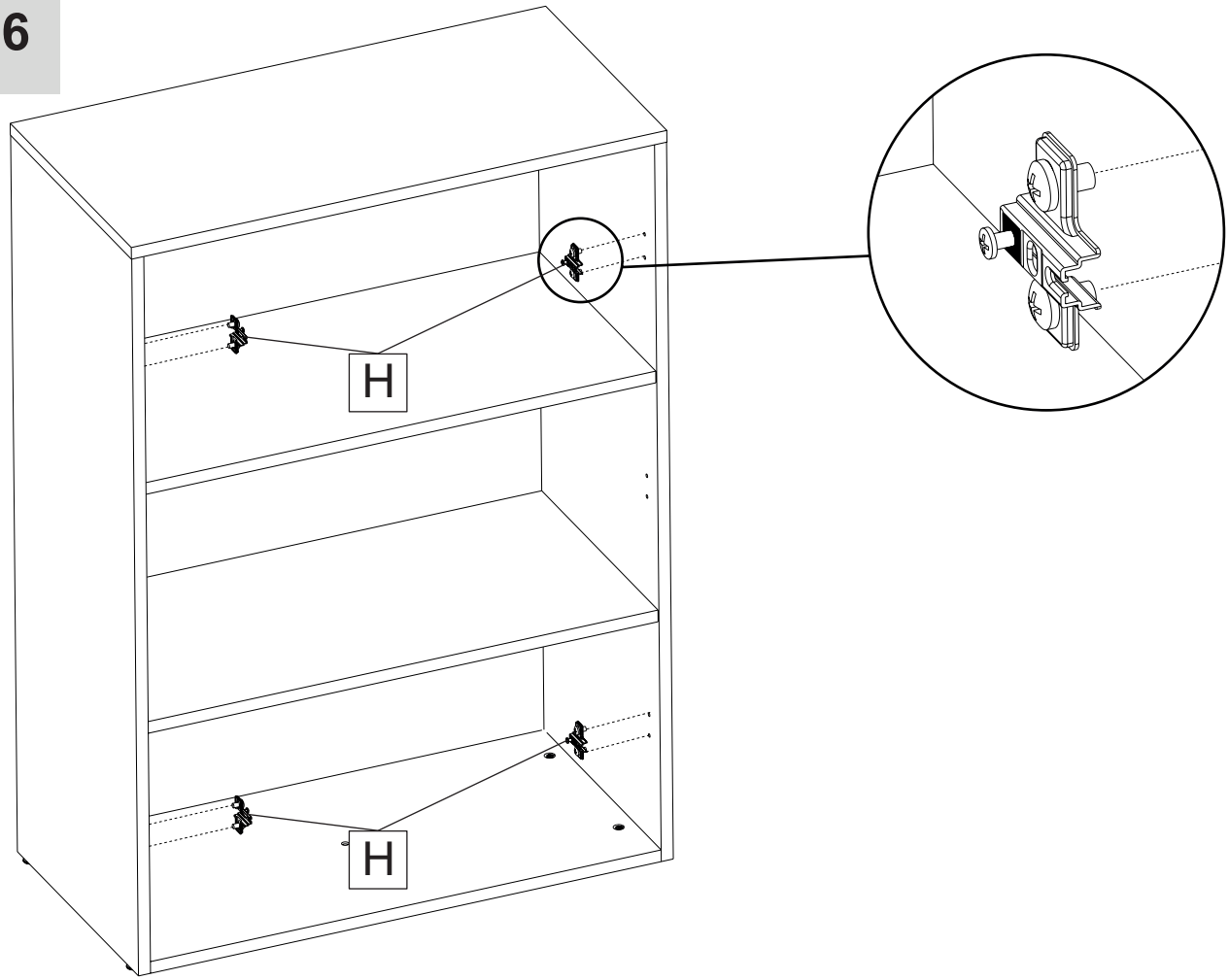

17

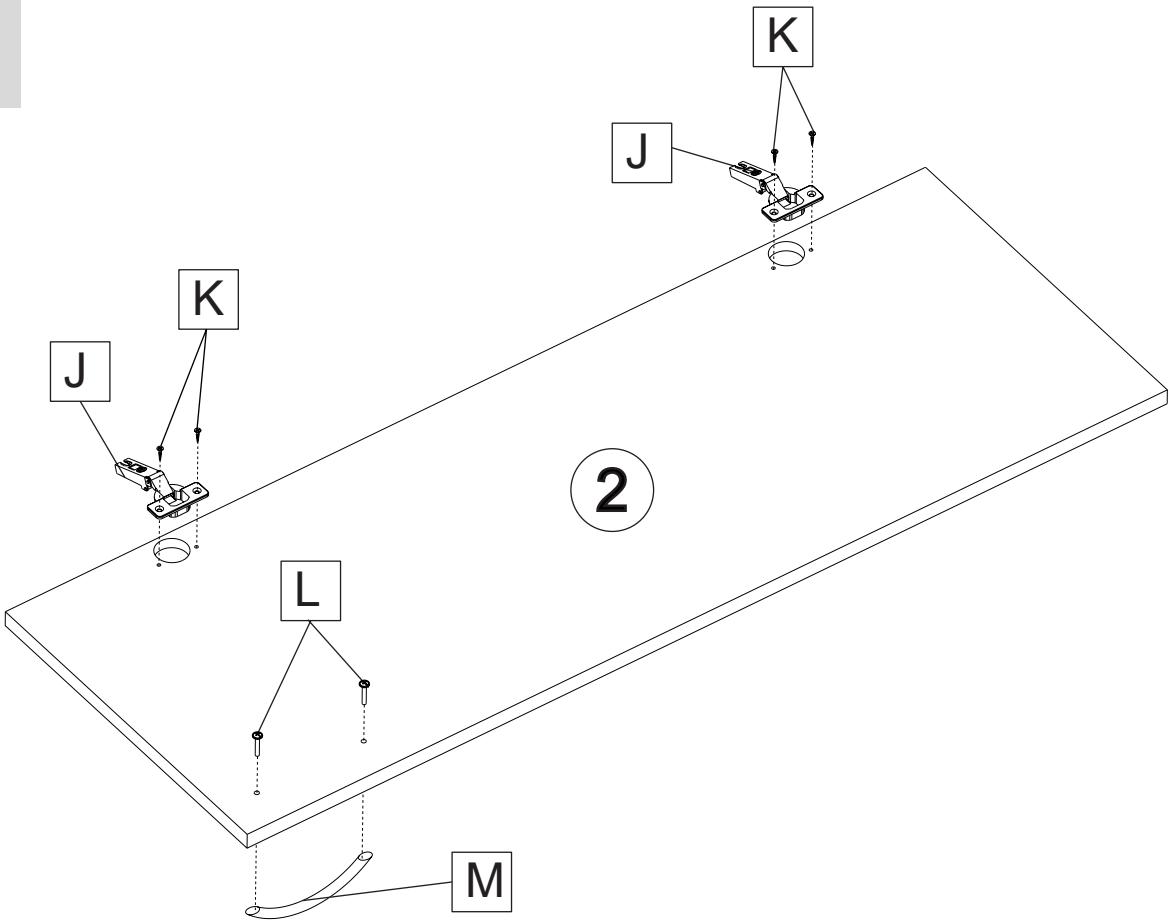

18

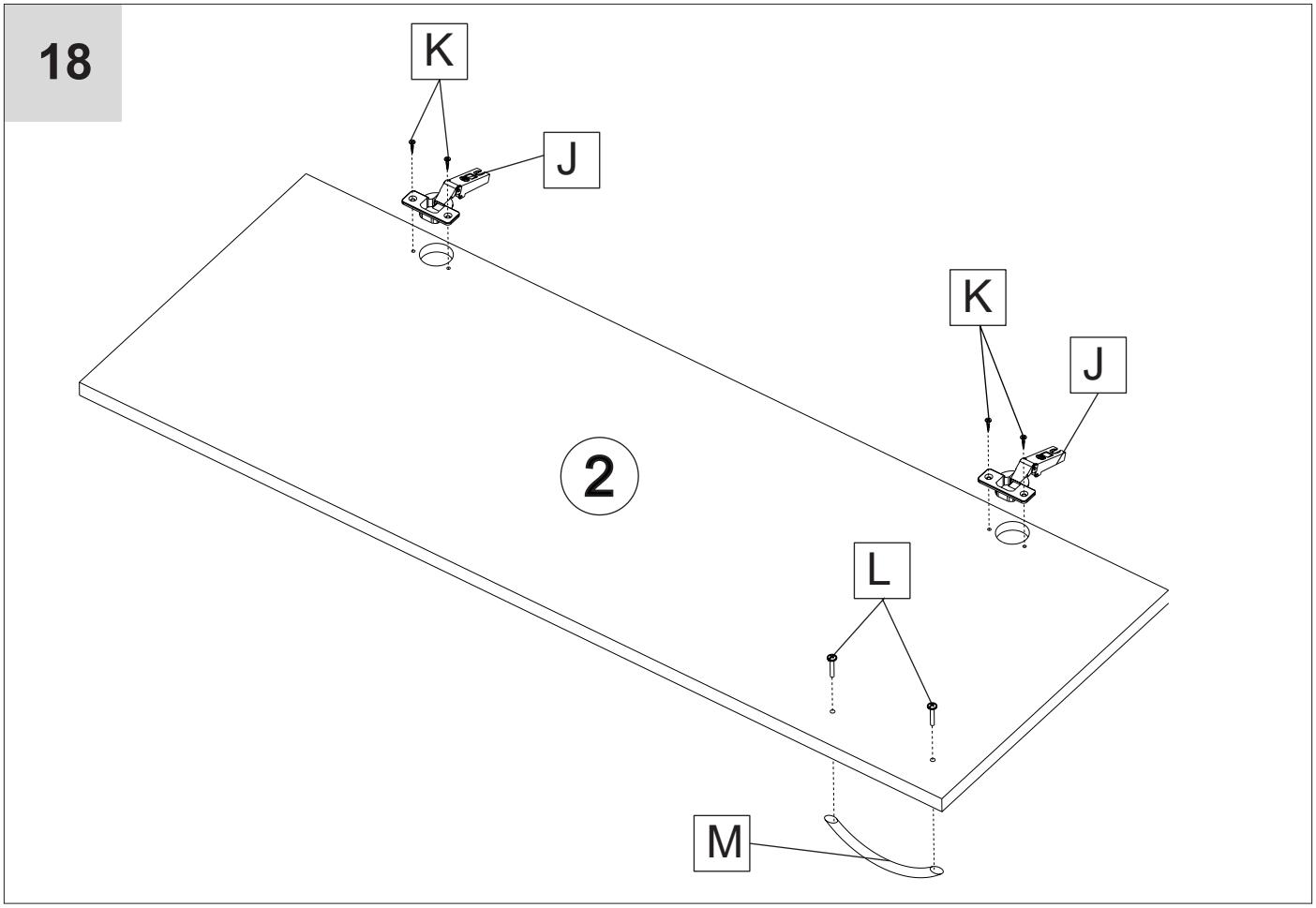

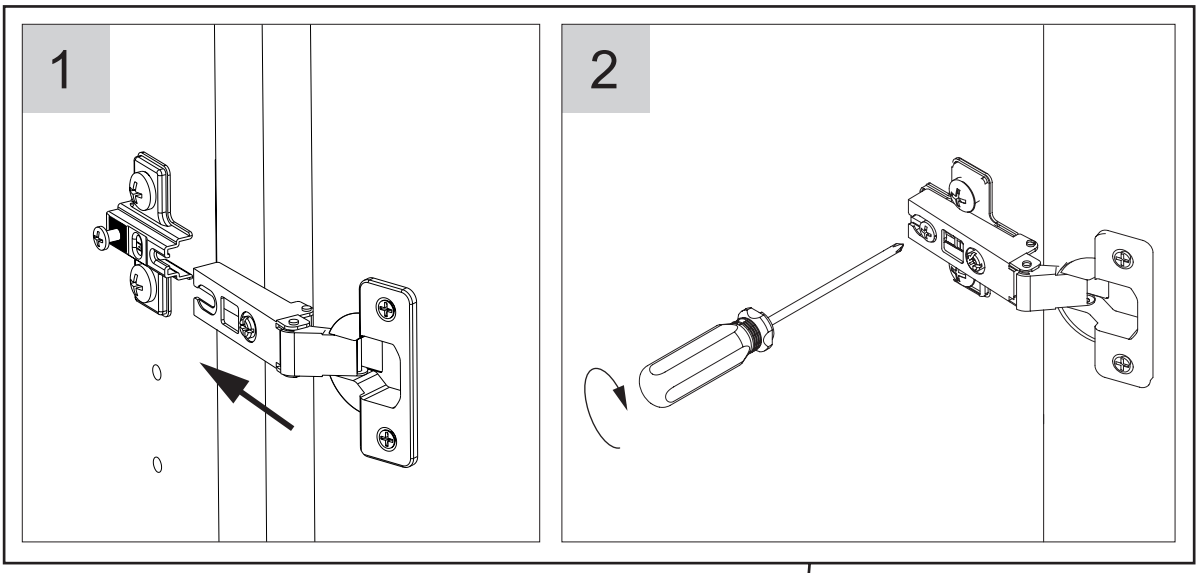
1
2

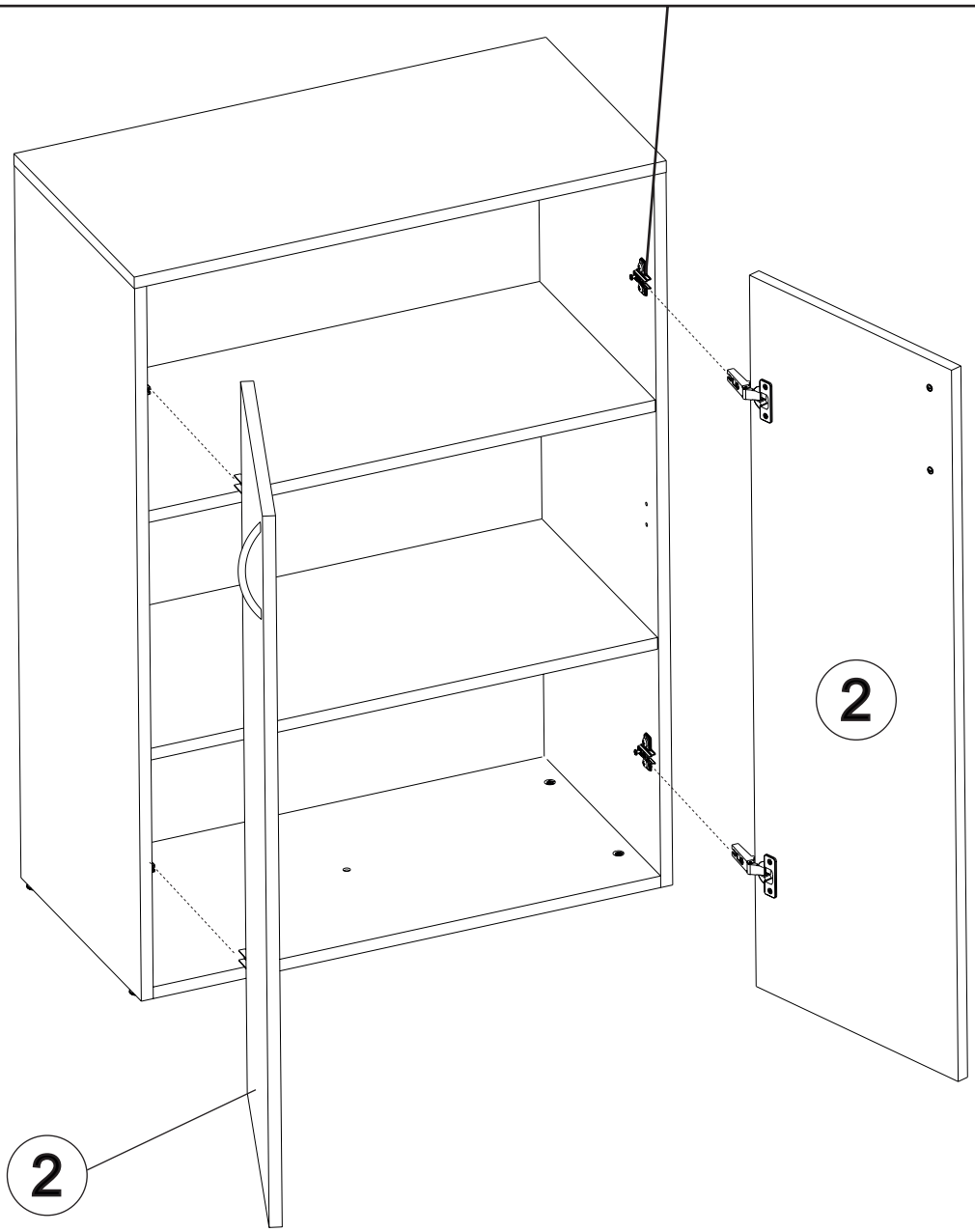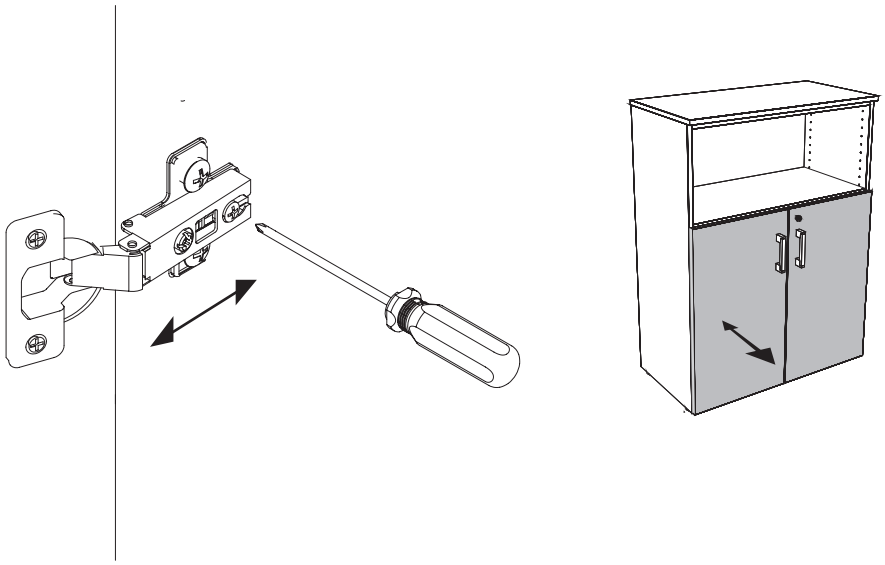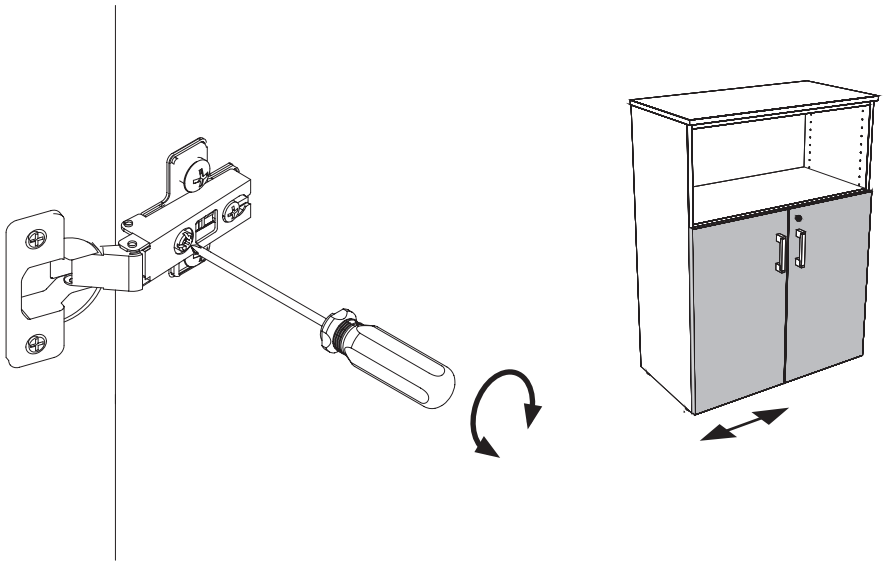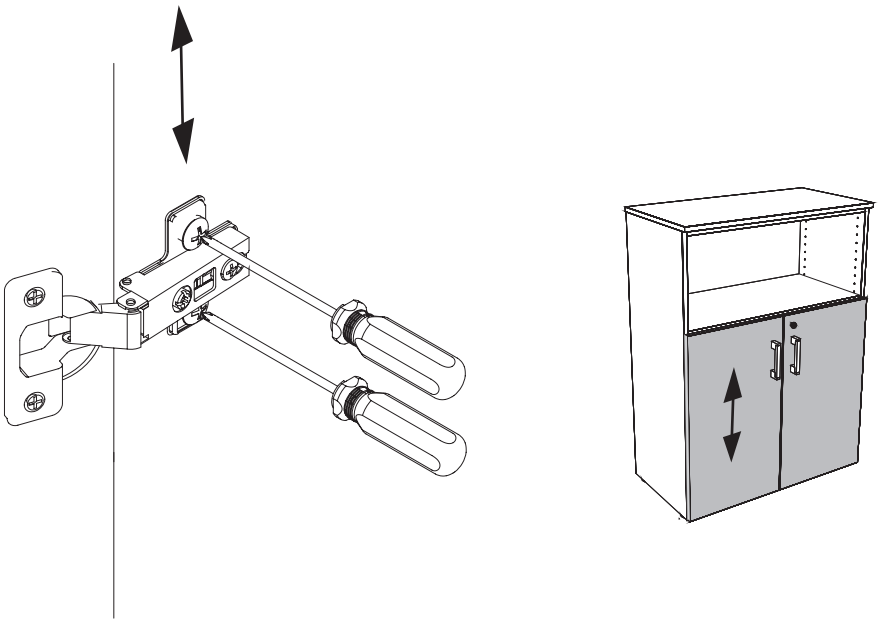
2
2