B2Bpartner
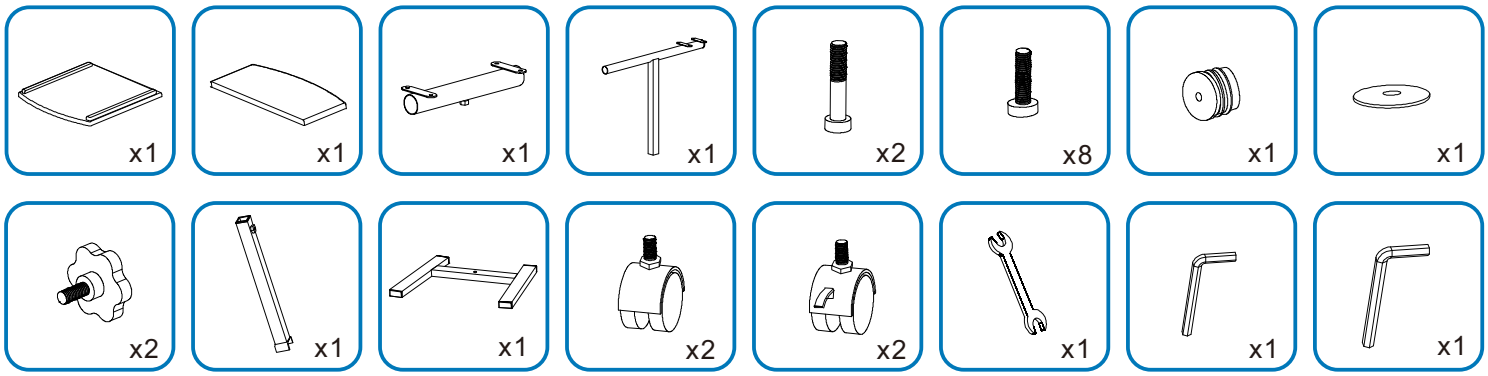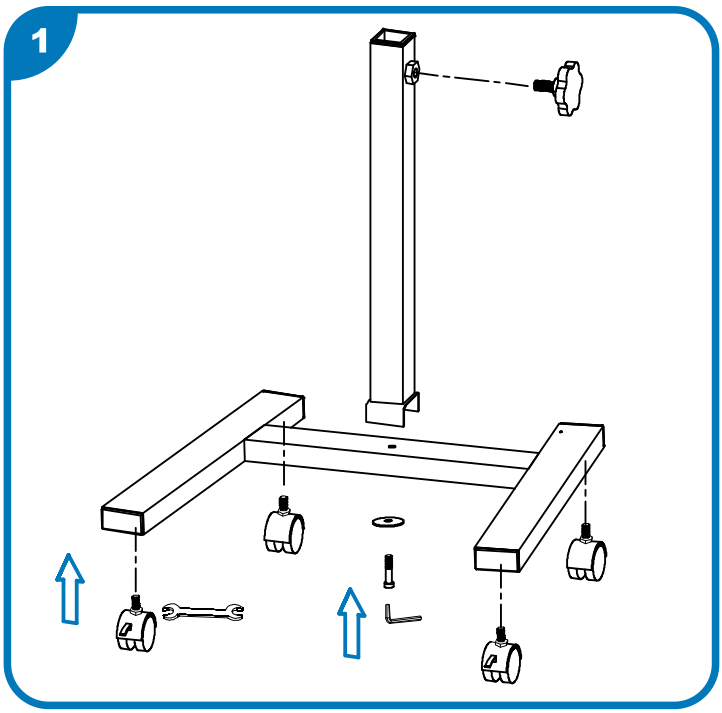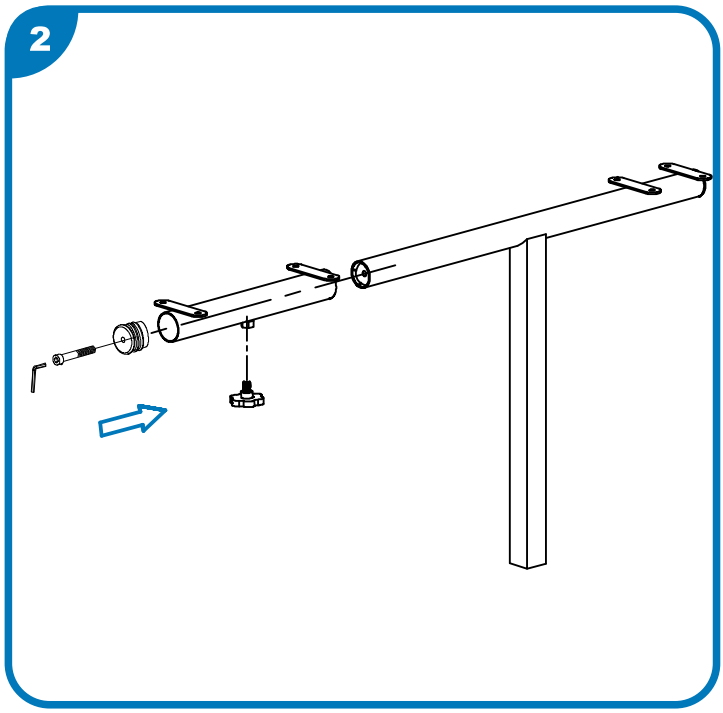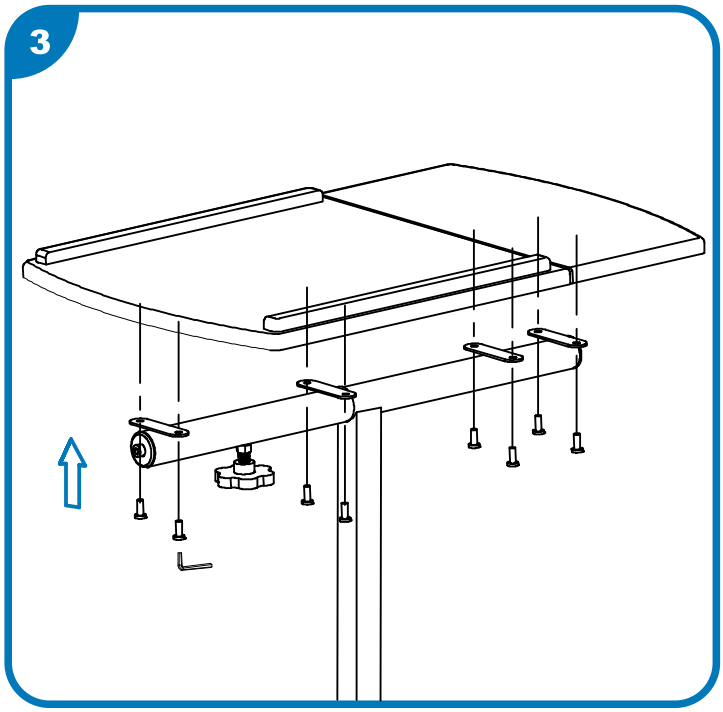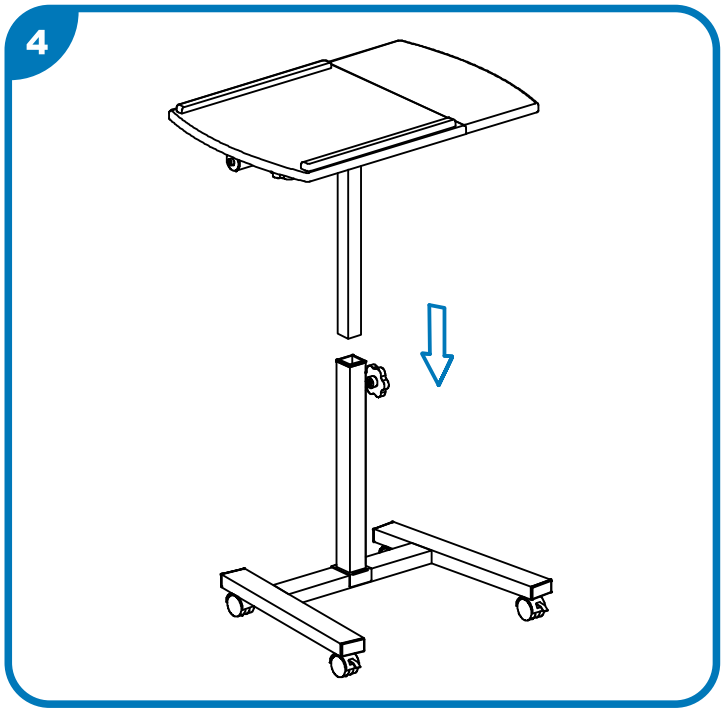
420122