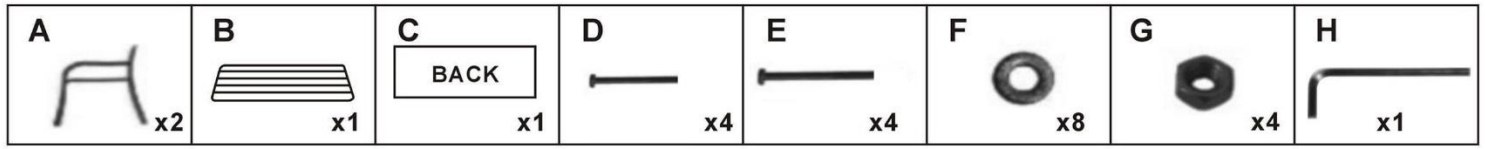
A
x2
B
x1
C
BACK
x1
D
x4
E
x4
F
x8
G
x4
H
x1

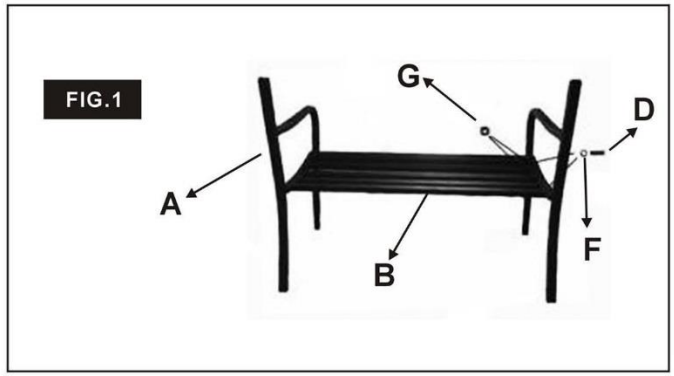
FIG.1
G
D
A
B
F

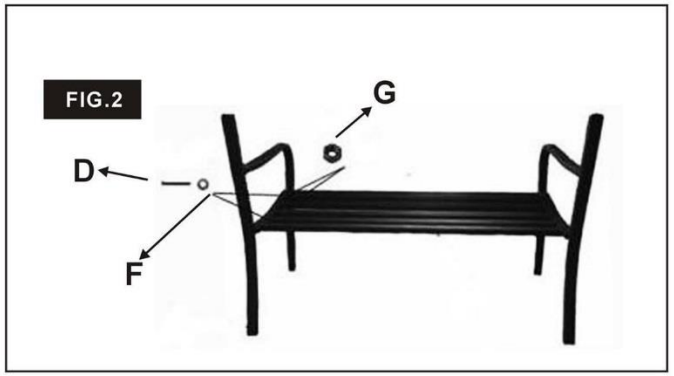
FIG.2
G
D
F

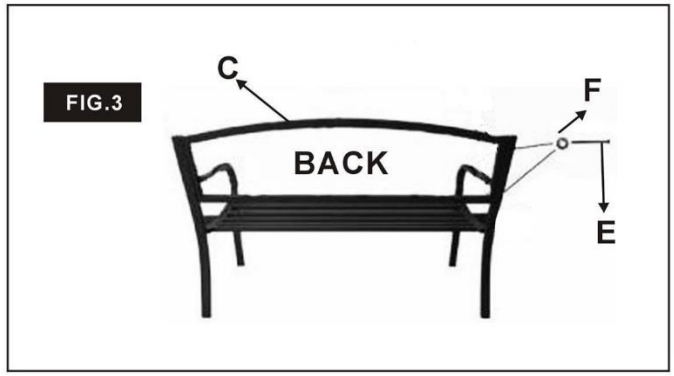
FIG.3
C
F
BACK
E

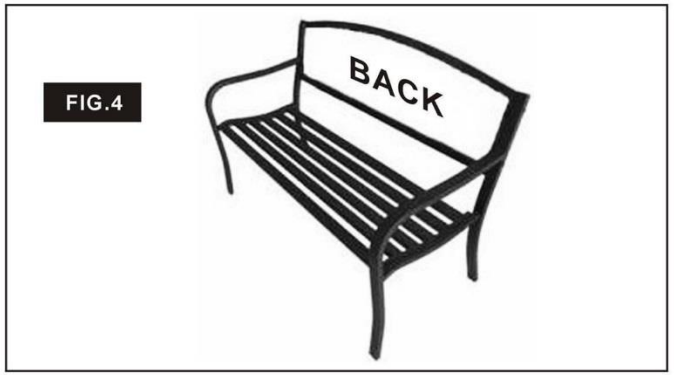
FIG.4
BACK

B2Bpartner®